NSG 4070D

Comprehensive RF Conducted Immunity Solution

The **NSG 4070D** by Teseq (Ametek CTS) is a compact and versatile EMC immunity test system, featuring an integrated signal generator, power amplifiers, and RF power meter. It provides precise and efficient electromagnetic susceptibility testing for a wide range of applications, including industrial, automotive, medical, and consumer electronics.

The heart of the NSG 4070D is its integrated signal generator, producing sinusoidal signals from **4 kHz to 1 GHz**, with levels from **-60 dBm to +10 dBm**. It includes an internal modulator for amplitude and pulse modulation (AM and PM), both adjustable within and beyond standard specifications.

The NSG 4070D includes a modular power amplifier system tailored to specific testing needs:

- Testing in the frequency range from **150 kHz to 230 MHz** (e.g., IEC 61000-4-6 and ISO 7367-4 pulse A) with power models of **50 W** and **100 W**.
- Testing in the frequency range from **4 kHz to 400 MHz** (e.g., ISO 11452-4, MIL 461-CS114) with **50 W** and **100 W** models.

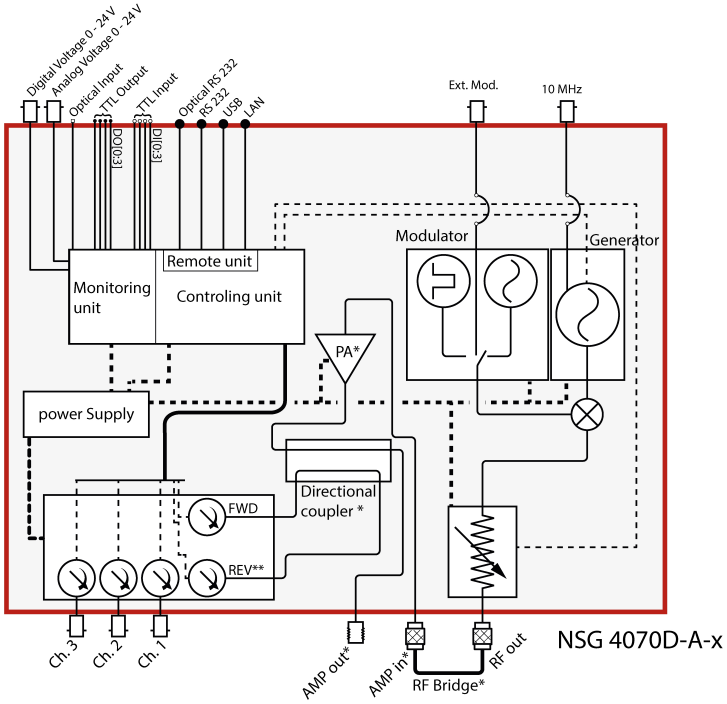

* Not applicable for the model NSG 4070D-A-0
** Reverse power is only measured for the power amplifier with 400 MHz maximum frequency

Block diagram of NSG 4070D-A-x

During the testing, the Equipment Under Test (EUT) can be monitored in different ways. This monitoring can be logged in the result file and can be used to abort the test. The NSG 4070D offers multiple monitoring options for:

- **TTL Inputs/Outputs:** For seamless integration with external monitoring equipments.
- **Optical Monitoring:** Detects the status of light indicator for real-time feedback.
- **Digital and Analog monitoring:** for up detecting the input voltage as high as 24 V

The NSG 4070 offers **pre-programmed** test routines for easy setup, enabling quick selection of standard tests. Users can modify and save custom routines, eliminating the need to create them from scratch.

The NSG 4070's vector programming mode enables precise control of frequency and level parameters for each test vector, with adjustable start and stop conditions for complex test.

MAIN FEATURES

- **Integrated signal generator 4 kHz to 1 GHz**
- **3 external power meter inputs 4 kHz to 1 GHz**
- **Multiple EUT monitoring options**
- **5,7“ TFT color display**
- **Internal, menu-based control software**
- **Basic remote control software and report generator included**
- **Optically decoupled remote control**
- **Suitable for various RF conducted EMC tests: Industrial, Automotive, Military, Avionics, and Medical.**

NSG 4070D

Comprehensive RF Conducted Immunity Solution

RF Generator Specifications

	NSG 4070D-Ax
RF Generator	
Frequency range	4 kHz to 1 GHz
Resolution	1 Hz
Reference frequency	10 MHz
Aging	25 ppm
RF Level	
Level rang:	-60 dBm to +10 dBm
Resolution	0.1 dB
Settling time	10 ms
Amplitude Modulation	
Modulation depth	0 to 100 %
Modulation frequency range:	1 Hz to 50 kHz
Frequency resolution	1 Hz
Pulse Modulation	
Rise/fall time (10%/90%)	< 1 µs
Modulation frequency range	0.01 Hz to 1 MHz
Frequency resolution:	10 mHz
Duty cycle	1 % (depends on pulse width)) to 100 %
Pulse width	≥50ns
External modulation	
Delay time	< 1 µs/180°
Period	min. 20 µs
Pulse width	min. 10 µs

RF Power meter Specifications

	NSG 4070D-Ax
Frequency range	4 kHz to 1 GHz
Measurement Range	
Channel 1	-35 dBm to +27 dBm (NSG 4070D-A400M-xx:-40 dBm to +27 dBm)
Channel 2 & 3	-45 dBm to +20 dBm
Accuracy 10 to 30°C	<0.5 dB, typ. <0.3 dB
Max. input	+28 dBm
Noise level	>5 dB below the measurement range
Input return loss	>20 dB (below 500 MHz), >17 dB (500 MHz to 1 GHz)
Connector	BNC socket, 50 Ω

Power Amplifier Specifications

	NSG 4070D-A230M-50	NSG 4070D-A230M-100	NSG 4070D-A400M-50	NSG 4070D-A400M-100
Frequency range	150 kHz to 230 MHz		4 kHz to 400 MHz	
P1dB	150 KHz to 190 MHz: 50 W 190MHz to 230MHz: 50 W	100 W 90 W	4KHz to 250MHz: 50 W 250MHz to 400MHz: 45 W	100 W 70 W
Psat (min)	80 W	120 W	80 W	110 W
Small signal Gain	47.5 dB	50 dB	52.5 dB	50 dB
Gain flatness (max.) ±	± 1.5 dB	± 2 dB	± 2.5 dB	± 3 dB
Harmonics @ P1dB (typ.)	>20 dBc			
Spurious (min.)	>70 dBc			
Output VSWR Tolerance	infinite any phase (no foldback)			
Stability	Unconditional			
Output VSWR (Typ.)	2:1			

Typical performance of power amplifier

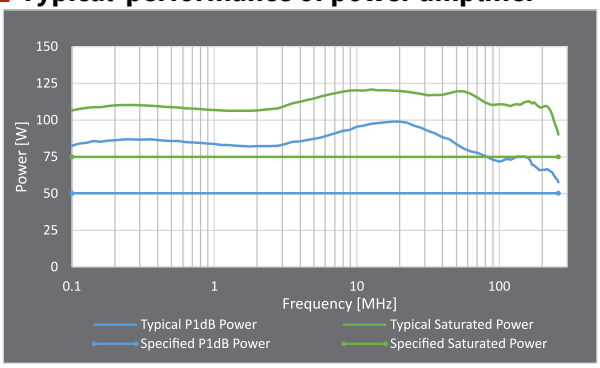

Typical power performance of the amplifier in NSG 4070D-A230M-50W

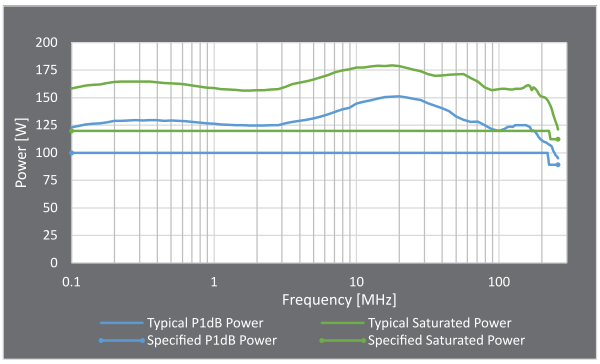

Typical power performance of the amplifier in NSG 4070D-A230M-100W

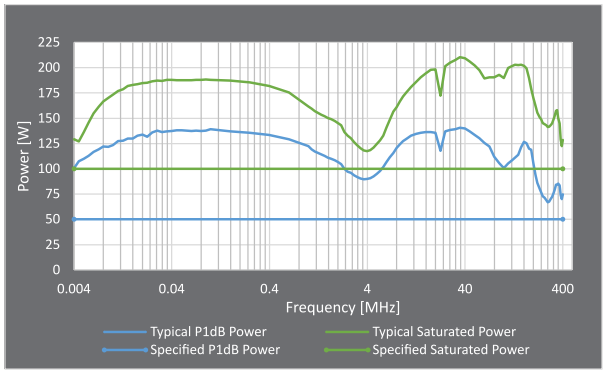

Typical power performance of the amplifier in NSG 4070D-A400M-50W

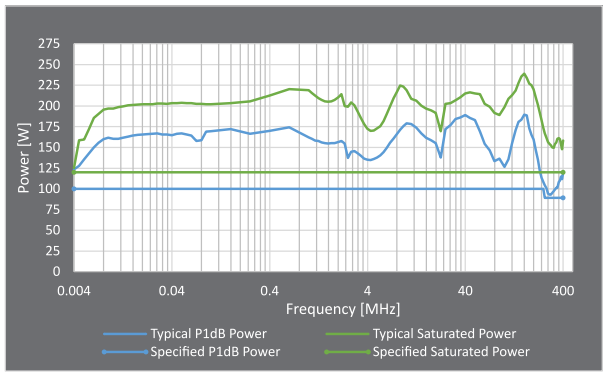

Typical power performance of the amplifier in NSG 4070D-A400M-100W

Front panel ports

	NSG 4070D-Ax
Analog ports	
Generator output	N socket, 50 Ω, 4 kHz to 1 GHz
Power amplifier input	N socket, 50 Ω, max. +10 dB
Power amplifier output	N socket, 50 Ω
Power meter channel 1 to 3:	BNC socket, 50 Ω
Digital ports	
USB	USB host connector for USB stick, keyboard and mouse.

Back panel ports

	NSG 4070D-Ax
Analog ports	
Monitoring analog input	BNC socket, Ri=15 kΩ, 0 to 24 V, 6 mV resoultion
External modulation input	BNC socket, impedance >10 kΩ, Level: 1 Vpp to get 100% AM, 1 Hz to 50 kHz
10 MHz reference output	BNC socket, 50 Ω, approx. 1 Vpp
Digital ports	
Monitoring digital input	BNC socket, Ri=1.5 kΩ, 0 to 24 V, V_{on}= 2 to 3 V
Monitoring optical input	LWL (light wave connector), HP versatile link HFBR0501 series, 40 kBd avoid scattered light on the back panel
User port	D-Sub 15 pole 4 TTL inputs (can be used to monitor/stop the EUT during the test 4 TTL outputs (can be used to control external devices) Supply voltage: +12 V/ 800 mA, - 12 V/ 200 mA, +5 V/ 800 mA
Remot control ports	
RS232	D-Sub 9 pole, up to 115200 Bd
RS232 optical	Connector 2x HFBRx523 socket for 1 mm fiber optic cable. cable length: 5 m to 30 m, 115200 Bd > 30 to max. 50 m, 38400 Bd
USB	USB B for remote control
Network	RJ45, Ethernet 10/100 Base-T

Maximum power rating

	NSG 4070D-0	NSG 4070D-A230M-50	NSG 4070D-A230M-100	NSG 4070D-A400M-50	NSG 4070D-A400M-100
Maximum power consumption 100 to 240 VAC, 50/60 Hz	80 W	360 W	470 W	400 W	550 W
Maximum current for 100 V	1.0 A	4.0 A	5.0 A	4.5 A	6.0 A
Maximum current for 230 V	0.5 A	2.0 A	2.5 A	2.2 A	3.0 A

General Data

	NSG 4070D-Ax
Operating temperature range	0°C to 40°C
Storage temperature range	-20°C to 60°C
Relative humidity	95 %/30°C (no moisture condensation)
EMC	DIN/EN 61326-1:2006
Shock and Vibration	DIN/EN 60068-2-27 & DIN/EN 60068-2-6
Protection class	DIN/EN 61010-1

Dimensions

	NSG 4070D-0	NSG 4070D-Ax
Size (W x H x D)	45 (19") x15 (3HU) x 42 mm³	
Weight	approx. 8 kg	approx. 14 kg

Available Models

Product	Description	Item#
NSG 4070D-0	Compact immunity test system 4 kHz to 1 GHz RF generator and power meter (without power amplifier)	262102
NSG 4070D-A230M-50	Compact immunity test system, 4 kHz to 1 GHz RF generator and power meter (with 50 W module 150 kHz to 230 MHz)	262103
NSG 4070D-A230M-100	Compact immunity test system, 4 kHz to 1 GHz RF generator and power meter (with 100 W module 150 kHz to 230 MHz)	262104
NSG 4070D-A400M-50	Compact immunity test system, 4 kHz to 1 GHz RF generator and power meter (with 50 W module 4 kHz to 400 MHz)	262105
NSG 4070D-A400M-100	Compact immunity test system, 4 kHz to 1 GHz RF generator and power meter (with 100 W module 4 kHz to 400 MHz)	262106

Accessories

Product	Description	Item#
NSG 4070D-LFCP license	FW License for the IEC 61000-4-39 (LFCP), It is for the NSG 4070D models	56-262143
NSG 4070-TC	Traceable calibration (ISO17025), order only with the device	97-253290
NSG 4070-DAkkS	DAkkS calibration (ISO17025), order only with the device	98-253290
SW 4070	Option for NSG 4070: RF-Switch network 2x SPDT	253850
LE 4070	RF cable set for NSG 4070	253104